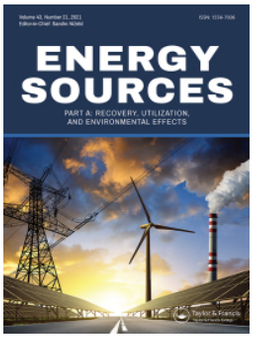

Taylor & Francis
Taylor & Francis Group

Energy Sources, Part A: Recovery, Utilization, and Environmental Effects

ISSN: (Print) (Online) Journal homepage: https://www.tandfonline.com/loi/ueso20

Operation assessment of a hybrid solar-biomass energy system with absorption refrigeration scenarios

Adamantios G. Papatsounis, Pantelis N. Botsaris, Konstantinos A. Lymperopoulos, Renos Rotas, Zafeiria Kanellia, Petros Iliadis & Nikos Nikolopoulos

To cite this article: Adamantios G. Papatsounis, Pantelis N. Botsaris, Konstantinos A. Lymperopoulos, Renos Rotas, Zafeiria Kanellia, Petros Iliadis & Nikos Nikolopoulos (2022) Operation assessment of a hybrid solar-biomass energy system with absorption refrigeration scenarios, Energy Sources, Part A: Recovery, Utilization, and Environmental Effects, 44:1, 700-717, DOI: 10.1080/15567036.2022.2049929

To link to this article: https://doi.org/10.1080/15567036.2022.2049929

Published online: 14 Mar 2022.

ENERGY SOURCES, PART A: RECOVERY, UTILIZATION, AND ENVIRONMENTAL EFFECTS
2022, VOL. 44, NO. 1, 700–717
https://doi.org/10.1080/15567036.2022.2049929

Operation assessment of a hybrid solar-biomass energy system with absorption refrigeration scenarios

Adamantios G. Papatsounis[a], Pantelis N. Botsaris[a], Konstantinos A. Lymperopoulos[a], Renos Rotas[b,c], Zafeiria Kanellia[b], Petros Iliadis[b,d], and Nikos Nikolopoulos[b]

[a]School of Engineering, Department of Production Engineering and Management, Sector of Materials, Processes and Engineering, Democritus University of Thrace, Laboratory of Mechanical Design, Xanthi, Greece; [b]Institute of Chemical Processes and Energy Resources, Center of Research and Technology Hellas (CREPI/CERTH), Thermi, Greece; [c]Department of Mechanical Engineering, Aristotle University of Thessaloniki, Thessaloniki, Greece; [d]Department of Electrical and Computer Engineering, Democritus University of Thrace, Xanthi, Greece

ABSTRACT

Refrigeration systems claim increasing research attention as the climate crisis intensifies. One of the most well-established viable and feasible solutions is solar cooling, as the necessary cooling energy is produced by exploiting the available solar irradiance. The utilization of solar thermal energy to produce cooling energy by absorption chillers fed by a driving heat source (such as solar energy) to produce cooling power. Existing works in the literature present mainly case studies and simulations for small-scale systems (less than 50 kW_c). The case study presented investigates the performance of a single-effect 316 kW_c absorption chiller under different renewable-only driving heat source scenarios (solar-driven, biomass-driven, and a hybrid approach). The results indicate a significantly advantageous performance in combined heat generation (solar field and biomass boiler connected in series) compared to the scenarios of biomass or solar energy as a sole heat source. Moreover, an absorption chiller's economic indicators appear more fetching than a centrifugal electric chiller of the same capacity, as the pay-back period is significantly reduced. The Net Present Value (N.P.V. – over 75% greater in the case of absorption chiller compared to the centrifugal electrical chiller) and Return on Investment (R.O.I.) values are increased in the case of the absorption chiller option (18.03% against 15.24% of the centrifugal electrical chiller). The system described in this paper operates in Eastern Macedonia and Thrace, Greece, and is part of one of the largest self-sufficient energy communities. The case study presented is the first attempt at performance evaluation of a large-scale (more than 250 kW_c) cooling system operating in a local energy community.

ARTICLE HISTORY
Received 18 October 2021
Revised 24 February 2022
Accepted 25 February 2022

KEYWORDS
Absorption chiller; solar thermal energy; solar cooling; thermal energy storage; energy system simulation

Introduction

The Climate crisis has made the transition to a carbon-neutral era an urgent need and, therefore, profoundly accelerated developments in decarbonization energy production technologies technically and legally (Magazzino et al. 2021). An increase of Renewable Energy Sources' (R.E.S.) share in energy production for building sector heating and cooling purposes is imperative as the demand increases rapidly according to (Ürge-Vorsatz et al. 2015) and (Şoimoşan and Felseghi 2016). In this context, E. U. legislation about nearly Zero-Energy Buildings (nZEB) has further increased the research interest

CONTACT Adamantios G. Papatsounis adpapat@gmail.com School of Engineering, Department of Production Engineering and Management, Sector of Materials, Processes and Engineering, Democritus University of Thrace, Laboratory of Mechanical Design, Xanthi, Greece

and findings in this area (Batas-Bjelic, Rajakovic, and Duic 2017). Many energy technologies' combinations have been studied over the last years, applicable in residential, commercial, and industrial Heating, Ventilation, and Air-Conditioning (HVAC) systems.

Undoubtedly, solar energy is an essential source for local regions characterized by adequate solar potential and can be utilized for both heat and power generation. Solar thermal production units have been studied thoroughly in recent literature (Aisa and Iqbal 2016). Due to solar irradiation's intermittent nature, it is common to incorporate a boiler in solar thermal heating installations, providing high-quality heating and uninterrupted thermal comfort. Specifically, selecting a biomass boiler further reduces the environmental footprint of the heating and cooling load coverage and is selected as a solution in many cases showing a potential direction of building load coverage by solely renewable energy sources (Palomba et al. 2020). A comprehensive and detailed review of combinations of the above energy sources has been performed recently (Mohaghegh et al. 2021).

For additional renewable energy utilization, the promising refrigeration technology of absorption cooling is usually combined with solar thermal collectors, which provide the necessary driving heat for the absorption cycle in the summer months. While absorption cycles have been used in various applications, solar absorption cooling is a topic of increasing attention due to its lower operating costs, significant CO_2 emissions reduction, and exploitation of any thermal system's excess heat. Its research and commercial interest increase (Sheikhani et al. 2018). The C.O.P. of a single-effect absorption chiller varies between 0.6 and 0.8, meaning that it can transform 60–80% of the driving thermal energy input into cooling energy. Solar absorption systems are viable in cases where the cost of energy for driving thermal energy is relatively low (Çengel, Boles, and Kanoglu 2019). One of the main advantages of absorption chillers is their higher coefficient of performance than other thermally operated refrigeration cycles, i.e., adsorption or desiccant cooling systems (Nienborg et al. 2017).

Grignaffini S. et al. investigated the effect of solar absorption cooling in rural buildings. The results highlighted the utilization of excess thermal energy during summer and increased energy production. No supplementary firing was necessary due to the installed capacity of the solar system, but a complete techno-economic review was not provided, and the feasibility of the arbitrary capacity scenario was not investigated further (Grignaffini and Romagna 2012).

The design of a cooling system with an absorption chiller (70 kW_c) exploitation was investigated by Tsoutsos et al. (2010). The results of their study concluded on an optimized size solution, which highlighted the environmental sustainability and economic feasibility of the absorption technology solution, despite the high initial investment cost. Yin H. et al., in a similar study, tested the performance of a 45kW_c single-effect absorption chiller driven by evacuated tube collectors (E.T.C.) when operating at different load scenarios at Purdue University (Hang and Qu 2010). The authors concluded that the absorption chiller solution is cost-effective and highly efficient. Different system layouts were tested by Ali. S. et al., who, in their study, investigated scenarios of a supplementary firing system connected in parallel and in series with an E.T.C. solar thermal system in order to provide the required thermal energy to an absorption chiller of 1023 kW_c (Shirazi et al. 2016). The results indicated as a more effective layout the parallel connection of the two systems (firing equipment and solar collectors), which increased the solar fraction of the total system by over 20%. The techno-economic implications of the proposed system were not investigated thoroughly. Figaj R. et al. also investigated the feasibility of a solar-fed small-scale absorption chiller (Figaj et al. 2019). The study's conclusions proposed an improvement in the annual thermal efficiency of the system and significant savings in primary energy. However, the economic indicators such as the payback periods of the proposed system and profitability index (return of investment – R.O.I.) were not favorable.

Scenarios of storage of cooling energy are also studied in the existing literature. Storage of cooling energy has been investigated regarding its economic feasibility, where Ban M. et al. investigated the optimal cooling thermal energy storage (CTES) solution in a conventional compressor chiller accompanied with a P.V. to provide the necessary electrical energy (Ban et al., 2012). Their findings presented feasible economic solutions when the energy produced by the P.V.s was sold to the grid at night and the chiller operated during nights to charge the CTES batteries. Furthermore,

thermal storage units increase system efficiency leading to higher energy conservation (Doracic et al. 2020; Groppi et al. 2021). Furthermore, Thermal Energy Storage (T.E.S.) technologies like Phase Change Materials (P.C.M.) or Thermochemical Materials (T.C.M.) have been proven promising solutions for both heating and cooling applications in (Zisopoulos et al. 2021). Moreover, different collector thermal management applications, including P.C.M., appropriate for solar cooling applications, might improve the performance of large-scale systems, as discussed in (Nižetić et al. 2021).

The dynamic response of such systems has been a subject of extensive study over the last few years. Several software tools have been used to develop accurate representative models for systems that involve the above technologies, the most common of which are TRNSYS (2021), MATLAB/Simulink (2021), Dymola (2021), and EnergyPlus (2021). In particular, Khan et al. have compared two different configurations of a solar absorption cooling system; with and without isolation option of solar collector to storage loop respectively (Khan et al. 2018). The comparison is implemented using the TRNSYS Type 107 model of single-effect absorption chillers and concluded in up to 25% higher primary energy saving factor for the first configuration. A. Budania et al. conducted experimental measurements to extract efficiency parameters at different operating conditions and a sensitivity analysis under different climate conditions. The conclusions indicated that increasing the collector area and applying proper system controls positively affects cooling potential while exceeding storage tank volume optimal size can decrease it significantly (Budania, Ahmad, and Jain 2013). Uçkan et al. have compared the energy performance of three different types of solar collectors integrated with a single-effect absorption chiller of 35 kW_c (Uçkan and Yousif 2021). Their analysis has been implemented in TRNSYS using Type 1b, Type71 and Type1245 modules for F.P.C., E.T.C., and concentrating parabolic collectors (C.P.C.), respectively, concluding in the superiority of C.P.C. Düzcan et al. used TRNSYS to compare the F.P.C. and E.T.C. as heat sources for absorption chillers under different scenarios and their analysis resulted in the viability of E.T.C. exclusively (Düzcan and Kara 2021).

Moreover, Altun et al. have analyzed the economic feasibility of a solar absorption cooling system (Altun and Kilic 2020). They incorporated a custom absorption chiller thermodynamic model created using E.E.S. software integrated with a top-level system model in TRNSYS and specified the values of collector area and slope, tank volume, and boiler setpoint temperature that lead to the highest solar fraction and lower payback period for five locations in Turkey. R. Hirmiz et al. evaluated solar fraction increase and storage volume reduction using Phase Change Material (P.C.M.) as a thermal storage technology (Hirmiz, Lightstone, and Cotton 2018). Mustafa et al. have done an extensive review and solid performance comparison of solar absorption cooling systems in the literature, pointing out that the design of solar absorption cooling systems should follow specific guidelines depending on local weather conditions and needed cooling capacity (Mustafa, Noranai, and Imran 2021). Sokhansefat et al., study the simulation results of an installed absorption cooling system in Tehran, ending up in optimal system future alterations (Sokhansefat et al. 2017). Xu et al. have proceeded to a model coupling between MATLAB and TRNSYS software to compare the effect of design parameters on system outputs, such as solar fraction and C.O.P., concluding that large collector area and high cutoff source temperature enhance system performance (Xu and Wang 2017).

Based on the above literature, the main research gap that this publication deals with is the absence of a sufficient volume of large-scale single-effect absorption chiller applications. The literature focuses mainly on small-scale applications (less than 50 kW_c) without adequate reference to community-level solar cooling (Franchini et al. 2015). As the demand for cooling increases and the tendency for district heating and cooling networks, large-scale solar cooling systems should be investigated more deeply (Dominković and Krajačić 2019). In addition, a lack of research activity has been observed in the study of a single-effect absorption cooling system where necessary thermal energy comes from a large installation of F.P.C. solar field (over 1800 m^2 of total aperture area in the current case study) connected in series with a biomass boiler. The above combination of energy sources leads to a fully renewable cooling system (neglecting electricity consumption of auxiliary equipment provided by the grid) which can be further studied for the decarbonization of other district and residential applications.

This paper aims to study the performance and viability of a large-scale absorption cooling system with hot water provided exclusively by renewable energy sources, namely an F.P.C. solar thermal field and a biomass boiler. The system under consideration is a student residences' building complex of Democritus University of Thrace (DUTh) in Xanthi, Greece. It includes a solar thermal field, a hot water thermal energy storage system, a biomass boiler, and an absorption chiller to cover heating, cooling, and domestic hot water (D.H.W.) demand (Botsaris, Lymperopoulos, and Pechtelidis 2020). Evaluating the system operation and assessing alternative scenarios requires high-order transient modeling capable of capturing the individual assets and overall system responses. In this manner, two widely used dynamic modeling and simulation software were utilized, namely TRNSYS and Dymola. The use of two software enables the exploitation of each tool's advantages and the comparison of the results.

In contrast with the most recent studies, the comparative analysis of different software results is conducted to draw more concrete conclusions about system dynamic operation. The developed models are simulated, and the results are compared to evaluate three different absorption refrigeration scenarios based on the driving heat source of the absorption chiller operation. Finally, an economic and technical evaluation compares the absorption chiller's viability solution against a centrifugal electric chiller for the system under investigation.

System description

System configuration

The energy community of DUTh is located at Eastern Macedonia and Thrace's geographical location, at Kimmeria Xanthi (41°10′N 24°55′E), and provides heating and cooling energy to a students' residences building complex (Botsaris, Lymperopoulos, and Pechtelidis 2020). However, the thermal and cooling needs of the community of Kimmeria are currently being met by R.E.S. The installations in place aim at achieving a renewable and sustainable energy system that can serve as a reference for similar projects in the Mediterranean climate supporting net-zero targets. In this regard, the primary energy sources used for covering the students' thermal and cooling needs form a polygeneration system consisting of a solar field of 1.18 MW_{th}, 40 m^3 of water tanks for thermal energy storage (T.E.S.), a biomass boiler of 1.15 MWth, and a single-effect absorption chiller of 316 kW_c accompanied by a 720 kW_c cooling tower. The overall system topology and the main links among the various assets are schematically depicted in Figure 1.

Thermal energy production system

At the northwest side of the DUTH community, 720 selective solar collectors are installed (top left side of Figure 1), 2.58 m^2 each, using a water-glycol mixture with a 60% ethylene-glycol concentration as a heat transfer medium in order to prevent freezing conditions. The solar field consists of 4 identical solar collectors' loops. Each loop consists of 180 solar panels, and a "reverse-return" connection is selected to achieve hydraulic balance. Each loop has an installed capacity of 295 kW_{th} and exchanges heat with a solar station (Botsaris, Lymperopoulos, and Pechtelidis 2020).

The solar field includes a primary (water-glycol mixture) and a secondary (water T.E.S.) circuit for the exploitation and transfer of useful solar energy (middle left of Figure 1). The secondary water circuit is connected with the T.E.S. system, introducing the required thermal inertia. The hot water tanks serve the thermal needs through the biomass boiler, which adds any necessary complementary thermal energy to reach the required thermostat temperature setpoints. The absorption chiller is connected in series with the heat generation system utilizing the otherwise wasted heat for the cooling needs.

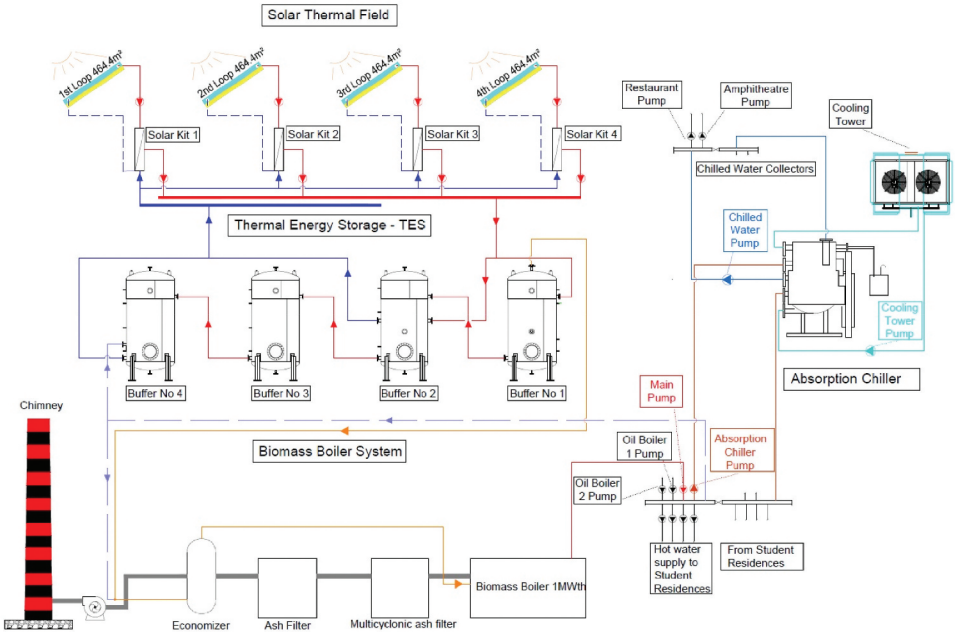

Figure 1. System layout of the energy production system in DUTh's energy community.

Absorption cooling system

The single-effect absorption chiller is connected in series with the hot water collector of the heating system (Figure 1). The chiller is connected to the cooling tower in series, as shown in Figure 1. As a solution, single-effect absorption chillers use a standard refrigerant (typically H_2O) and a salt, which is typically either LiBr or NaCl and is used to absorb the vapor from water (hence the salt is called the absorbent). In the current case study, LiBr/H_2O is used as a solution. Its concentration varies during the different processes of the refrigerating cycle between 63.2% (strong solution – the absorbent (LiBr) has not yet received the vapor refrigerant) and 55% (weak solution – the absorbent has diluted the refrigerant vapor).

The key components of the single-effect absorption chiller presented in this study are a generator (which provides the necessary heat to the absorbent/refrigerant solution in order to evaporate the refrigerant and create a strong solution of absorbent), a heat exchanger (a weak solution of LiBr from the absorber passes through the heat exchanger and exchanges heat with a strong LiBr solution coming from the generator), a condenser (the refrigerant that becomes vapor after the heat exchanger is then condensed on the condenser's tubes), an evaporator (the refrigerant is sprayed on the tubes of the coil and the chilled water transfers the cooling energy to the load because of its latent heat content).

For the chiller to work effectively, vacuum conditions inside the chamber of chilled and cooling water coils are necessary (0.2 ~ 0.6 kPa). The water vaporizes in temperatures less than 100℃ in vacuum conditions, and thus the absorption chiller should maintain at this state to produce chilled water as an output. However, hydrogen appears as a by-product of the refrigerating cycle and causes a pressure rise. Purge pumps restore the vacuum conditions when the phenomenon mentioned above happens.

System modeling

Mathematical formulation

In order to assess the thermodynamic performance of the solar absorption cooling, an energy balance analysis was undertaken. The schematics of the processes between the individual components of the absorption chiller is presented in Figure 2. The energy analysis of the single-stage hot-water fired absorption chiller is given by the equations (1) through (6):

Evaporator's energy balance

$$\dot{Q}_{evap} = \dot{m}_{evap} \times \left(h_{in,ch} - h_{out,ch}\right) \text{ (kW)} \tag{1}$$

where $\dot{m}_{evap}$ is the mass flow rate of the chilled water on the evaporator (kg/s) and $h_{in,ch}$ and $h_{out,ch}$ are the specific enthalpies of inlet and outlet chilled water on the evaporator respectively (kJ/kg).

Condenser's energy balance

$$\dot{Q}_{cond} = \dot{m}_{cond} \times \left(h_{in,coo} - h_{out,coo}\right) \text{ (kW)} \tag{2}$$

where $\dot{m}_{cond}$ is the mass flow rate of the cooling water entering the condenser (kg/s) and $h_{in,coo}$ and $h_{out,coo}$ are the specific enthalpies of cooling water entering and leaving the condenser respectively (kJ/kg).

Generator's energy balance

$$\dot{Q}_{gen} = \dot{m}_{gen} \times \left(h_{in,gen} - h_{out,gen}\right) \text{ (kW)} \tag{3}$$

where m_{gen} is the mass flow rate of the driving hot water entering the generator and $h_{in,gen}$ and $h_{out,gen}$ are the specific enthalpies of the driving hot water entering and leaving the generator respectively (kJ/kg).

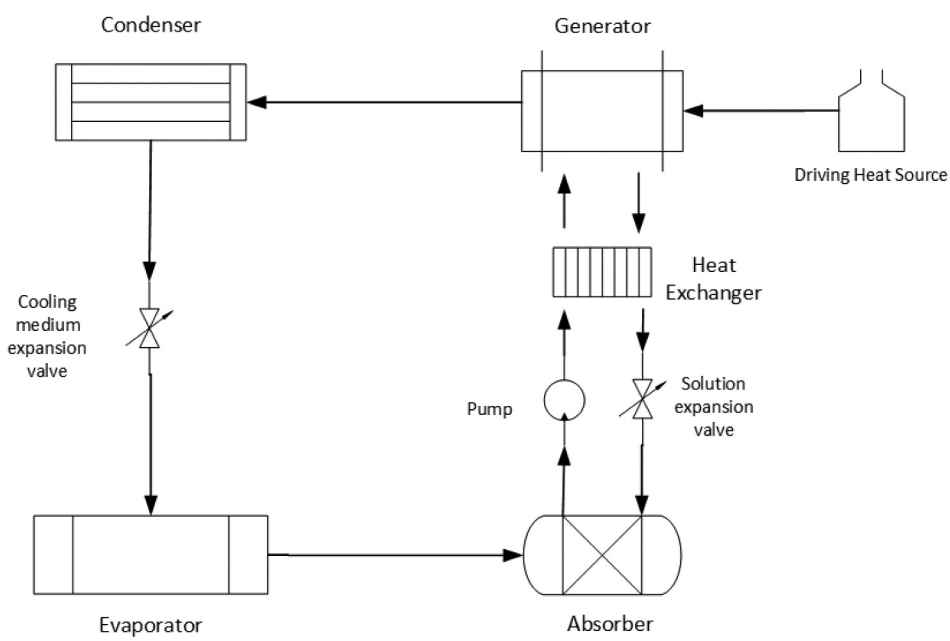

Figure 2. Single effect absorption chiller simplified diagram.

Absorber's energy balance

$$\dot{Q}_{abs} = \dot{m}_{abs} \times \left(h_{in,abs} - h_{out,abs}\right) \text{ (kW)} \tag{4}$$

where m is the mass flow rate of the cooling water entering the absorber (kg/s) and $h_{in,abs}$ and $h_{out,abs}$ are the specific enthalpies of the cooling water entering and leaving the absorber (kJ/kg).

Pump's energy balance

$$\dot{W}_{pump} = \dot{m}_{sol} \times \frac{\left(P_g - P_a\right)}{\rho} \text{(kW)} \tag{5}$$

where m_{sol} is the mass flow rate of the LiBr/H_2O solution (kg/s), P_g is the pressure on the generator and P_a is the pressure in the absorber (kPa) and ρ is the density of the solution (kg/m^3).

Taking into consideration the aforementioned, according to Carnot Law of Refrigeration, the COP is calculated as follows:

$$C.O.P = \frac{\dot{Q}_{evap}}{\dot{Q}_{gen} + \dot{W}_{pump}} \tag{6}$$

According to Equation (6), COP increases proportionally to the generator's temperature. It is worth stating that in single-stage solar absorption chillers (Çengel, Boles, and Kanoglu 2019), for every 6℃ of driving heat source temperature drop, a 2.5% drop of C.O.P is observed.

Model development

As already mentioned, the use of two modeling software, i.e., TRNSYS and Dymola, enables a deep understanding of the systems and compares the results. Therefore, system models were developed in both software to examine the transient behavior of the complex energy system of DUTh.

In Figure 3 TRNSYS model is depicted, and the specific TRNSYS components used for the simulations are listed in Table 1.

The developed Modelica system model used for conducting simulations in Dymola is displayed graphically in Figure 4. The open-source Buildings Modelica library, which specializes in the building sector's power generation and HVAC systems, was used to represent specific system components and a reference to develop custom component models (Wetter et al. 2014). More specifically, this library includes modules to proceed with the simulation of power generation units and thermal, hydraulic, and electrical networks. Due to its open-source nature, several peers have evaluated the models in the energy modeling field, and they can be considered valid.

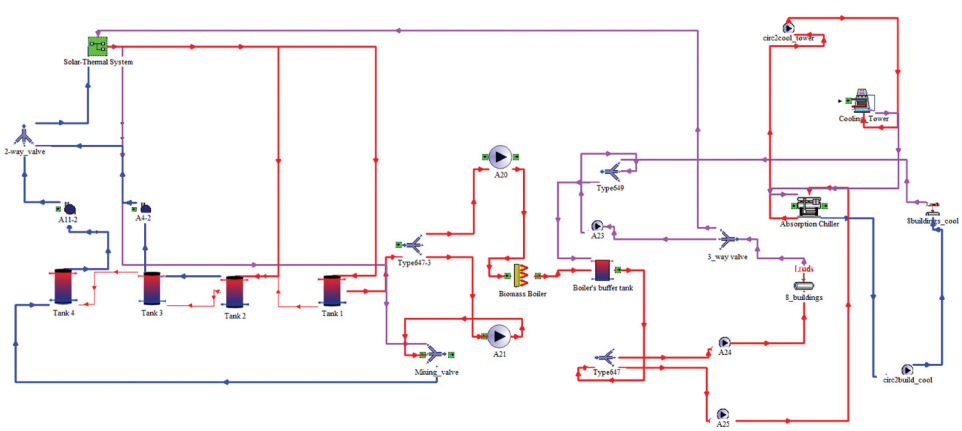

Figure 3. TRNSYS model for the simulation of the hybrid energy system.

Table 1. TRNSYS types used for the simulation of all scenarios.

Equipment	TRNSYS Type
Meteorological Data	Type 15–6 (TMY2)
Solar Collector	Type 539
Heat Exchanger	Type 91b
TESS	Type 534-No HX
Biomass Boiler	Type 659
Absorption Chiller	Type 677
Cooling Tower	Type 510
Load	Type 682

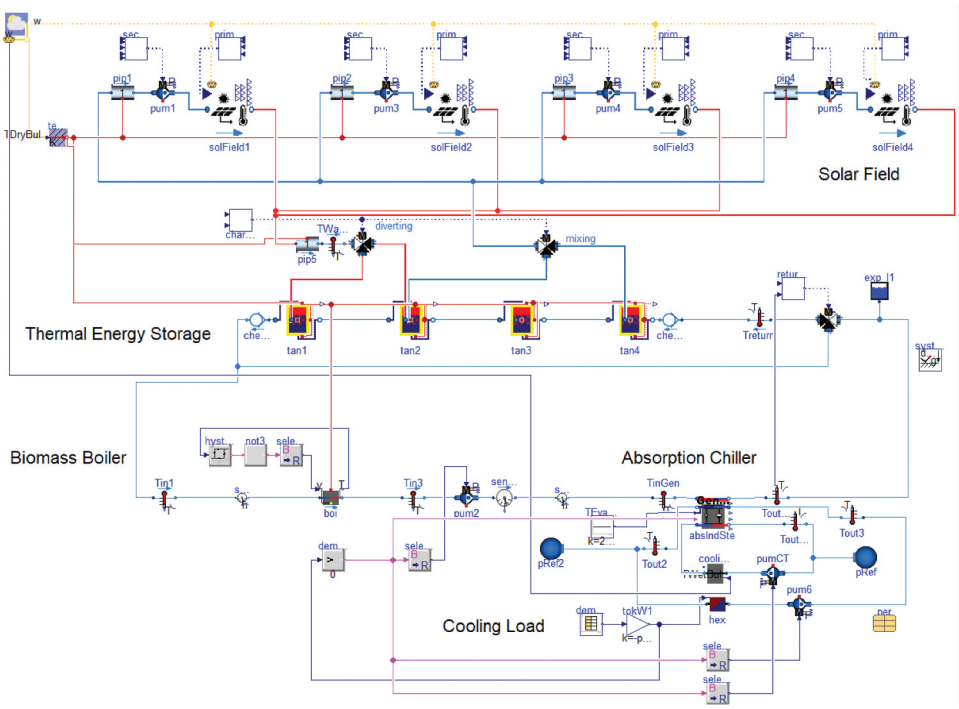

Figure 4. Modelica model represented graphically in Dymola software environment.

Simulation setup

The absorption chiller is designed to operate in the conditions presented in Table 2. These are the conditions used for the simulations, and the timestep of the equation solvers was set to 30 minutes for both programs. The cooling setpoint is set to 7℃, and the conducted simulation runs refer to 15–22 July. Boiler and absorption chiller operational hours are between 12 pm and 8 pm every day.

Cooling scenarios definition

To assess the capability of each heat source to provide sufficient thermal energy for cooling load coverage, three different scenarios are examined to compare the performance of the available heat generation system, as presented in Table 3.

Table 2. Design characteristics of the absorption chiller.

Loop	Design Feature	Value	Piping Length	Heat Loss Coefficient
Driving Heat Loop	Inlet temperature	80 °C	25 m	800 kJ/hr.m^2.K
	Outlet temperature	75 °C		
	Flow	44.64 m^3/h		
Cooling Loop	Inlet temperature	38.4 °C	32 m	1720 kJ/hr.m^2.K
	Outlet temperature	29.3 °C		
	Flow	73.44 m^3/h		
Chilled Loop	Inlet temperature	12.2℃	1200 m	12,700 kJ/hr.m^2.K
	Outlet temperature	6.7℃		
	Flow	48.96 m^3/h		
	COP	0.78		

Table 3. Description of simulated cooling scenarios.

Scenario #1	The real hybrid operation of the system (solar and biomass boiler combined)
Scenario #2	The operation of the biomass boiler as a driving heat source (no solar energy in the energy mix)
Scenario #3	The operation of the solar field as a driving heat source (no biomass energy in the energy mix)

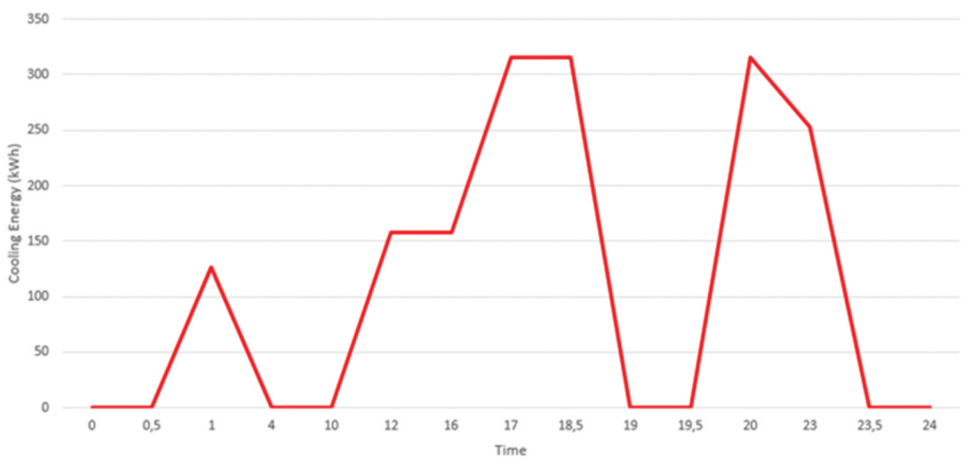

Figure 5. Cooling load to be met by the absorption chiller.

The profile used for the three cooling scenarios' demand load is selected to represent the student residences under study and is displayed in Figure 5. The load profile is distributed throughout the day, with the primary load being at the morning hours of 10 am to 7 pm. A significant load is also considered during late afternoon hours (from 7:30 pm until 11:30 pm, which represents the monthly understudy in the geographic location of Xanthi.

Results & discussion

Driving heat source temperature

In Figures 6 and 7, the driving heat source temperature of the absorption chiller is presented for the various scenarios for TRNSYS and Dymola, respectively. The results from both software simulations indicate a substantial deviation of the generator input temperature between scenarios

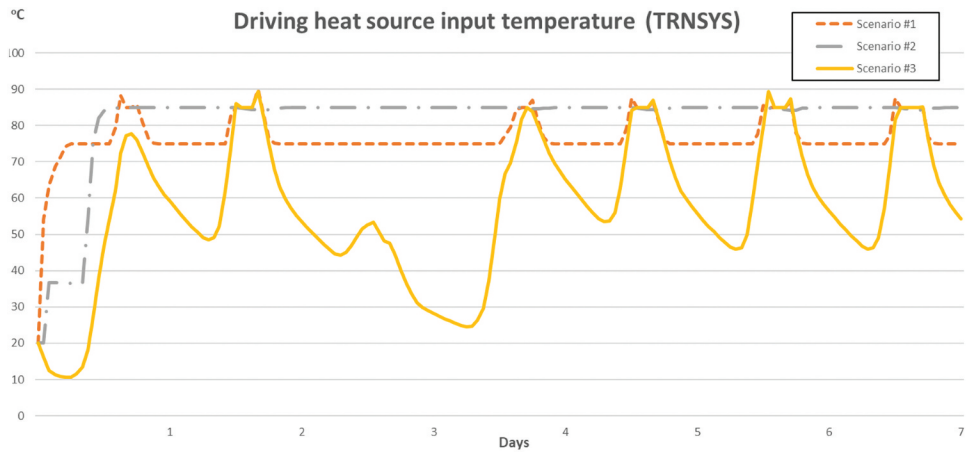

Figure 6. Results of the driving heat source temperature based on TRNSYS simulations for a week in July.

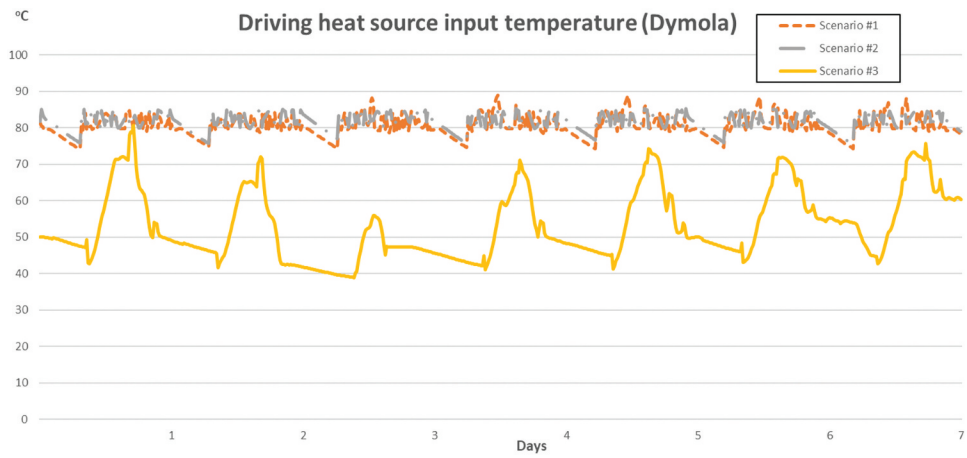

Figure 7. Results of the driving heat source temperature based on Dymola simulations for a week in July.

#2 and #3. The solar energy gain fluctuation is reasonable due to the stochastic availability of primary energy (solar irradiance) throughout the day. Moreover, on Day 3, a low driving heat source temperature is observed because of insignificant solar irradiance levels in scenario #3. However, in scenario #2, the biomass boiler operates for 8 hours daily and provides a constant driving heat temperature of approximately 85℃, something that the solar field exclusively cannot accomplish for some days in scenarios #1 and #3. The heat losses of the driving heat loop are relatively low, and therefore no significant temperature drop appears in scenarios #1 and #2 throughout the day.

In scenario #1, a steady generator input temperature is provided even on the days where solar irradiance contributes insignificantly to the energy mix. Scenario #3 presents more significant temperature fluctuations, as the energy production from the solar field is not enough at the later stages of the day (after 7 pm), and the remaining 1 hour of operation is fed only from the stored energy in the T.E.S. Specifically, results demonstrate that except for the wide fluctuation of the temperature, the highest values of 75℃ for some days seem relatively inadequate for the proper chiller operation as the generator's temperature, in this case, does not surpass 60℃. This leads to days that cooling load coverage is not possible.

Through hybrid operation (scenario #1), less fuel consumption is achieved (due to the higher temperature of the water supplied to the biomass boiler). In scenario #2, where the solar energy is not considered, the required driving heat for the absorption operation is provided by the biomass boiler, which has to upraise an input temperature from the water mains of 24.3℃ to 85℃, a temperature difference (ΔT) of 60.7℃, whereas, in the hybrid operation, the boiler has a moving average ΔT of 16.8℃. Furthermore, it becomes evident that the hybrid operation leads to the highest possible temperature entering the absorption chiller's generator.

Both software results indicate that solar irradiance cannot be seen as a reliable exclusive solution for the system under study (Scenario #1). Moreover, it can be seen that for specific periods in which the solar field generates its nominal power, the temperature far exceeds the maximum temperature reached by exclusive boiler operation. Although thermal energy storage adds temporal flexibility to the available solar energy and temperature is kept almost permanently above 40℃ in the summer months, a backup heat source like a biomass boiler is necessary for a stable operating temperature range and, therefore, a reliable operation of the absorption cooling system. The hybrid operation scenario #3 combines this feature with the exploitation of the solar thermal energy stored in hot water tanks to reduce the required heat by biomass combustion and, therefore, fuel consumption.

In general, the outputs of the two software converge to similar results regarding the driving heat source temperature. A significant difference is the temperature oscillation in the Dymola simulations for scenarios #1 and #2. This can be explained due to the peculiarities of the selected boiler control system, which is a typical hysteresis switch. Furthermore, a slight divergence in the lowest temperature value on Day 3 can be explained by differences in the thermal capacities of the piping systems, which can also be observed in the more slope of TRNSYS results during hours of chiller inactivity.

Chilled water temperature

TRNSYS results in Figure 8 indicate that the chiller achieves the setpoint temperature (7℃) after a short period of operation (approximately 1 hour) and can maintain a steady output of chilled water, as the applied load does not exceed the nominal capacity of the chiller. Due to the hydraulic installation's lack of proper insulation during the rest of the day, the chilled water absorbs heat from the environment and the terminals' environment. This occurs because the chilled water continues circulating for a pre-defined amount of time (the chiller has to operate for a pre-specified amount of time after the termination of its operation in order to regulate the state of the LiBr/H_2

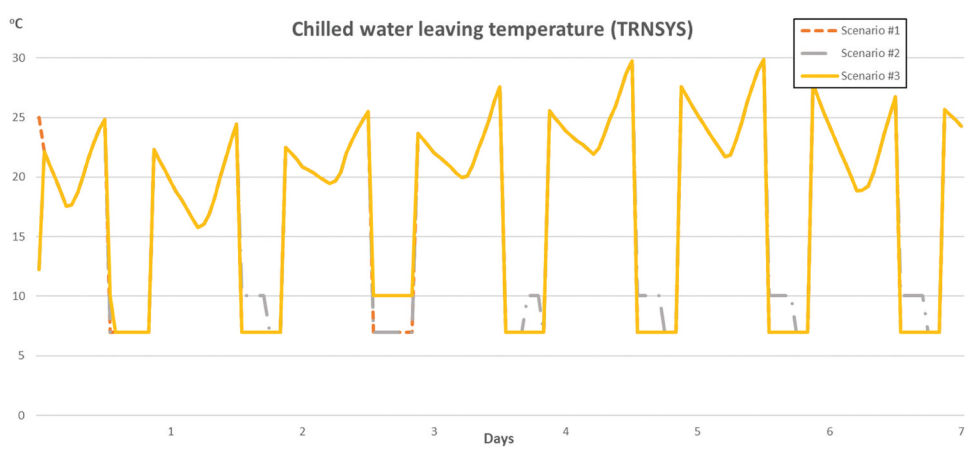

Figure 8. Results of the chilled water temperature based on TRNSYS simulations.

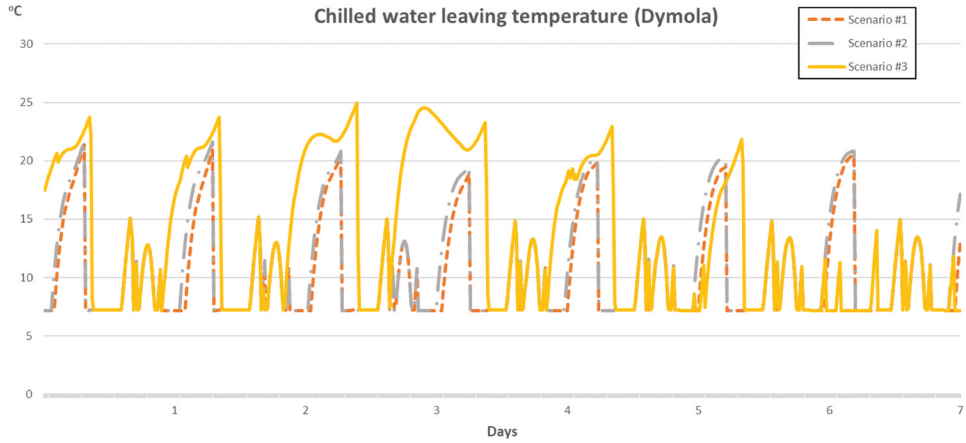

Figure 9. Results of the chilled water temperature based on Dymola simulations.

O solution internally). The solution has to return to a defined state to restart later normally. If the system is stopped abruptly and the solution has not returned to its initial state, it might cause significant damage to the internal equipment.

Dymola results capture a different behavior in chilled water leaving temperature response in scenario #3, where solar energy is the unique heat source. Especially for specific days, the chilled water temperature cannot reach the setpoint of 7℃. Notably, as shown in Figure 9, there is a time delay of some hours and sometimes a long-term inability in chiller actuation compared to the other scenarios.

This occurs due to the lack of available solar irradiance, also highlighted in Figure 7. Simultaneously with the limitations in available solar irradiance, the high levels of ambient temperature produce, as well, the occurrence of unmet load hours.

In both software results, the cooling circuit temperature is affected exclusively by the ambient conditions during periods of chiller inactivity. Differences between the results can be observed during these periods but can be explained by the different approaches in modeling the thermal behavior of the piping system, as already mentioned in the previous section. This argument can be explained by observing the much longer response delay in Figure 9 compared to Figure 8.

C.O.P.

Coefficient of performance (COP)

In Figure 10, the C.O.P. in all three scenarios varied in time, and in Day 3, where the solar irradiance was not sufficient for a solar absorption operation of the chiller (input temperature to the generator is greater than 60℃), no cooling energy was produced in scenario #3. For scenario #2 an intermittent production of cooling energy is observed because the absorption phenomenon caused a significant temperature difference at the driving heat source loop.

While the absorption chiller consumes thermal energy from the biomass boiler, the return temperature to the boiler drops significantly, and the boiler operates at its highest scale to confront the temperature drop. The 40 m^3 of hot stored water creates a buffering effect by providing the biomass boiler the necessary thermal energy to handle the temperature drop in the return loop of the driving heat section, as in scenario #1. Day 3 depicts that phenomenon, as no cooling power is provided to cover the load at the operation time because of the low driving heat temperature. However, the hybrid operation enables the system to meet the cooling load every single day, as the energy provided originates both from the biomass boiler (minimum chemical energy consumption – wood pellets – due to high entering water temperature) and from the solar field (available solar irradiance is above 700 W/m^2) and therefore sufficient.

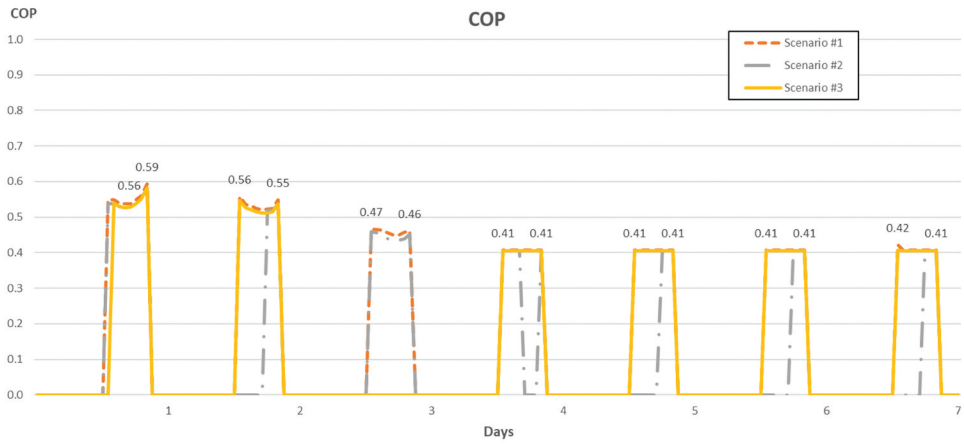

Figure 10. Results of C.O.P. calculation in TRNSYS simulations.

The nominal value of C.O.P., 0.78, was not reached with both software because the driving heat source never reached temperatures above 85℃. The heating system is not designed to produce hot water in such temperatures, so despite a cooling load near its nominal capacity, the chiller never reaches the value of 0.78. The other significant design parameter is that the chilled water loop pipes are not adequately insulated, leading to extensive heat exchange with the environment and relatively low operational efficiency. Part-load ratio (P.L.R.) scenarios should be investigated further.

Techno-economic evaluation

For the techno-economic characteristics of the system, the N.P.V. for 20 years, the R.O.I., and payback periods are calculated, and the comparison between the OPEX and CAPEX are presented. The baseline scenario would be the change of the N.P.V. of the production system of the energy community of DUTh if a centrifugal electrical chiller were installed versus the absorption chiller solution. Both would have the same installed capacity (105.3 kW_e for the centrifugal electrical chiller – C.O.P. value is 3, installed cooling capacity of 315.9 kW_c), and their operating hours would match (8 hours/day for the 90 cooling degree-days). Table 4 presents the CAPEX and OPEX (yearly) of these two different types of chillers.

There is a significant difference between the CAPEX of the two equipment, as the absorption chillers are not yet at the technological maturity level of the centrifugal electric chillers. Their commercial use has only recently started competing with conventional cooling systems, and Table 4 presents an overview of the technological leap that needs to be made to achieve affordable solar absorption cooling systems. Figures 11 and 12 present the payback periods in the cases of centrifugal electric chiller and absorption chiller installations, respectively. The case of absorption chiller selection leads to a payback period of 6 years, in contrast to the centrifugal chiller, whose payback period is at the 8th year. The significant difference is the OPEX of the two chiller types, which transforms the higher initial cost of investment for the absorption chiller (CAPEX) into a more attractive investment option. The significant difference between the OPEXs is observed because of the energy used to produce the cooling energy. For the centrifugal electric chiller, electricity is required to drive it, and the cost varies depending on the distributor's invoice. On the other hand, the absorption chiller is driven by hot water produced locally from the solar/biomass hybrid layout, which is relatively cheaper. The electrical power requirements of the absorption chiller are as low as three kW_e.

Table 4. CAPEX and OPEX of two different types of chillers to cover the cooling loads of DUTh's energy community.

	Centrifugal Electrical Chiller	Absorption Chiller
CAPEX	40,000 €	148,000 €
OPEX (maintenance and operational costs)	2,500 € (maintenance)/42,456 € (operational)	3,500 € (maintenance)/14,860 € (operational)

The R.O.I. of the two different types of investments is 18.03% and 15.24% for the absorption and centrifugal chiller, respectively. The N.P.V. indicator was considerably more favorable in the case of the absorption chiller. The difference between the two equipment's contribution to the community's N.P.V. was 75.52% higher in the case of absorption chiller selection.

In the case of DUTh, the thermal energy required to drive the absorption chiller generator originates from the excess heat of 100MWh/y of the energy community (Botsaris, Lymperopoulos, and Pechtelidis 2020). If the absorption chiller operates for 90 cooling-degree days with a cooling profile as presented in the case studies (Figure 5), it consumes 147 MWh/y. The necessary excess of 47 MWh/y (considered in the aforementioned techno-economic study) can be produced by the hybrid system as the solar thermal field will have a load to meet, and it will operate at nearly nominal capacity throughout summer, as the water stored in the T.E.S. will present significant ΔT. So, the transfer of energy from the primary system will be more significant. Additionally, the biomass boiler will operate intermittently and provide additional thermal energy to meet the cooling loads. Not only the whole system operates at its designed level, but the R.O.I. and N.P.V. of the system are affected positively, as presented above.

Conclusion

This study presents a performance evaluation of a 316 kW_c absorption chiller under three different scenarios of operation: sole biomass, solely solar energy, and a hybrid solution. A techno-economic comparison against a conventional electric chiller has also been implemented. Compared to the existing literature, the study's novelty lies in the scale of the system under evaluation. Large-scale solar absorption systems are addressed scarcely, and their techno-economic performance is of utmost importance toward the sustainable energy transition in the scope of the authors. An additional contribution of this study lies in the large capacity of the F.P.C. solar thermal field (approximately 1.2 MWth), and that, along with a biomass backup heating system,

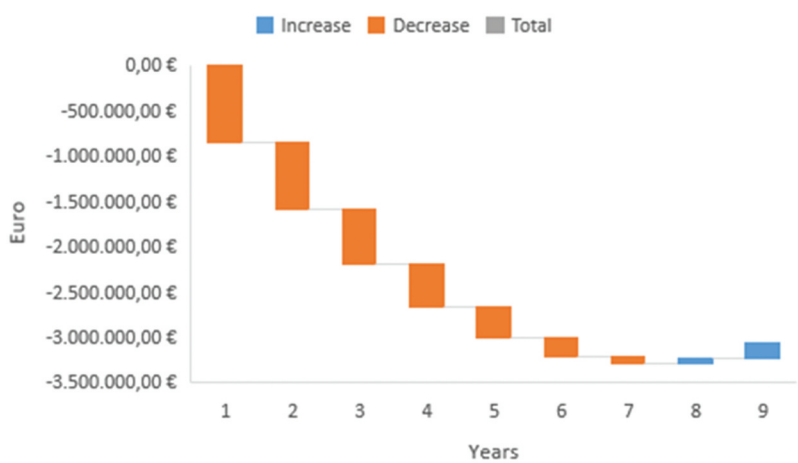

Figure 11. Centrifugal electric chiller contribution to payback period to the existing system. Payback at the beginning of the 8th year.

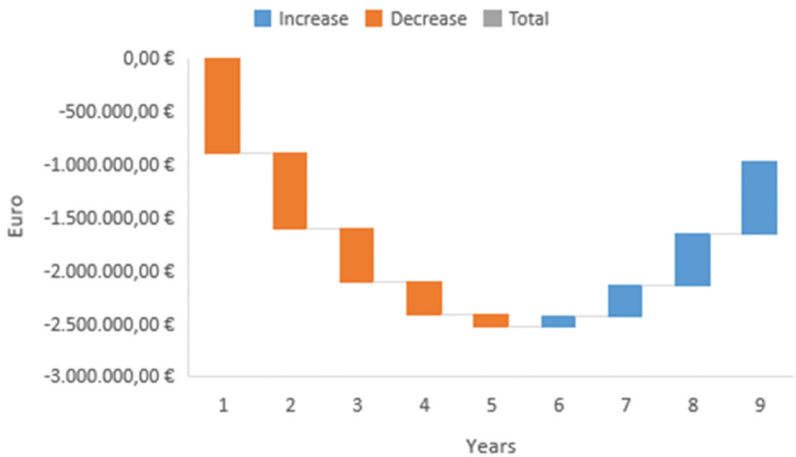

Figure 12. Absorption chiller contribution to payback period to the existing system. Payback at the beginning of the 6th year.

create a combination of fully renewable heat sources for the current cooling system. Furthermore, the comparative analysis of the results from two different software (TRNSYS and Dymola) enriches the system representation leading to a more consolidated comprehension of its operation.

The results indicated:

- Significant improvement was observed in the scenario of hybrid solution, where the load was met regardless of the availability of solar energy. In contrast, the solar-only scenario proved insufficient for the referred load and days with no solar irradiation available.
- The scenario of biomass boiler only driving the necessary heat to the absorption chiller proved significantly more expensive, and an incapability to meet the load during operational hours was observed.
- The techno-economic performance of the absorption chiller versus a regular centrifugal one, with the same capacity, provided interesting insights regarding the contribution to the payback period of the two cases, where the absorption chiller contributed significantly by reducing the payback period by 2 years in contrast to the regular centrifugal chiller (primarily due to the high operational cost of the centrifugal chiller).
- The N.P.V. of the energy production system of DUTh was 75.52% higher in the choice of an absorption system in contrast to the regular centrifugal chiller.
- The significant difference in selecting cooling equipment is that the R.O.I. for the two cases differed by over 2.7% in favor of the absorption chiller than the centrifugal chiller.

The results mentioned above should be replicated for other periods of the cooling season, and different load scenarios should be tested to validate the sensitivity of the installed chiller's capacity under different load conditions. These results highlight the importance of the acceleration of absorption technologies in order for them to be market-competitive, as they are a viable and environmentally friendly solution for the coverage of the planet's cooling needs. Future work for the present case study would assess different load scenarios while the system operates under different solar fraction scenarios. Different scenarios of different tank-volume-to-collector-area ratios would also provide, in the point of view of the authors, useful insight into some key technical challenges of the current large-scale solar cooling application. An optimized solution will lead to maximum solar energy utilization and, therefore, maximum profit from reduced biomass consumption. Considering a low-temperature power generation unit, such as an O.R.C. system, for the coverage of auxiliary electricity loads of chiller and pumps would increase even more the share of renewables for the heating and

cooling system and raise the interest of an economic evaluation. Finally, the investigation of co-simulation between TRNSYS and Dymola, would exploit the advantages of both software (Elsheikh et al. 2013).

Nomenclature

$\dot{Q}_{abs}$	Absorber's thermal power input
$\dot{Q}_{cond}$	Condenser's thermal power input
$\dot{Q}_{evap}$	Evaporator's thermal power input
$\dot{W}_{pump}$	Pump's power input
CAPEX	Capital Expenditures
CPC	Concentrating parabolic collectors
COP	Coefficient of Performance
CTES	Cold Thermal Energy Storage
ETC	Evacuated tube collector
FPC	Flat-plate Collector
HVAC	Heating, Ventilation, and Air-Conditioning
NPV	Net Present Value
nZEB	Nearly Zero-Energy Building
OPEX	Operational Expenditures
PCM	Phase Change Material
ROI	Return of Investment
TCM	Thermochemical Material
TES	Thermal Energy Storage
TMY	Typical Meteorological Year
ΔT	Temperature difference

Author contributions

A.G. Papatsounis: Conceptualization, writing, calculations and simulations, proof-reading and corrections. *P.N. Botsaris*: conceptualization, calculations, proof-reading, reviewing and corrections. *K. Lymperopoulos*: calculations, proof-reading. *R. Rotas*: conceptualization, writing, calculations and simulations, proof-reading and corrections. *Z. Kanelia*: simulations, proof-reading, reviewing. *P. Iliadis*: simulations, proof-reading, reviewing. *N. Nikolopoulos*: proof-reading, reviewing.

Disclosure statement

No potential conflict of interest was reported by the author(s).

Funding

This research is supported by the European project Renaissance (Renewable Integration & Sustainability in Energy Communities, HORIZON 2020, GA 824342).

ORCID

Adamantios G. Papatsounis http://orcid.org/0000-0002-2815-594X
Renos Rotas http://orcid.org/0000-0002-2005-8993
Zafeiria Kanellia http://orcid.org/0000-0001-6730-7195
Petros Iliadis http://orcid.org/0000-0001-8869-0170
Nikos Nikolopoulos http://orcid.org/0000-0002-5550-456X

References

Aisa, A., and T. Iqbal. 2016. Modelling and simulation of a solar water heating system with thermal storage. 2016 IEEE 7th Annual Information Technology, Electronics and Mobile Communication Conference (IEMCON) Vancouver, BC, Canada, 1–9, doi:10.1109/IEMCON.2016.7746283.

Altun, A. F., and M. Kilic. 2020. Economic feasibility analysis with the parametric dynamic simulation of a single effect solar absorption cooling system for various climatic regions in Turkey. *Renewable Energy* 152 (June):75–93. doi:10.1016/j.renene.2020.01.055.

Ban, M., G. Krajačić, M. Grozdek, T. Ćurko, and N. Duić. 2012. The role of cool thermal energy storage (CTES) in the integration of renewable energy sources (RES) and peak load reduction. *Energy* 48 (1):108–17. December. doi:10.1016/j.energy.2012.06.070.

Batas-Bjelic, I., N. Rajakovic, and N. Duic. 2017. Smart municipal energy grid within electricity market. *Energy* 137 (October):1277–85. doi:10.1016/j.energy.2017.06.177.

Botsaris, P. N., K. Lymperopoulos, and A. Pechtelidis. 2020. Preliminary evaluation of operational results of RES systems integrated in students' residences in Xanthi, Greece. IOP Conference Series: Earth and Environmental Science Thessaloniki, Greece, 410, 012048, January. doi:10.1088/1755-1315/410/1/012048.

Budania, A., S. Ahmad, and S. Jain. 2013 August. Transient simulation of a solar absorption cooling system. *International Journal of Low-Carbon Technologies* ctt060. doi:10.1093/ijlct/ctt060.

Çengel, Y. A., M. A. Boles, and M. Kanoglu. 2019. *Thermodynamics: An engineering approach*. 9th ed. New York, NY: McGraw-Hill Education.

Dominković, D., and G. Krajačić. 2019. District cooling versus individual cooling in urban energy systems: The impact of district energy share in cities on the optimal storage sizing. *Energies* 12 (3):407. January. doi:10.3390/en12030407.

Doracic, B., M. Grozdek, T. Puksec, and N. Duic. 2020. Excess heat utilization combined with thermal storage integration in district heating systems using renewables. *Thermal Science* 24 (6 Part A):3673–84. doi:10.2298/TSCI200409286D.

Düzcan, A., and Y. A. Kara. 2021. Investigation of the usage potential of the evacuated tube and the flat plate collectors to assist an absorption chiller. *Sustainable Energy Technologies and Assessments* 47 (October):101437. doi:10.1016/j.seta.2021.101437.

Dymola - Dassault Systèmes®. 2021. Accessed July 06, 2021. https://www.3ds.com/products-services/catia/products/dymola/

Elsheikh, A., Widl, E., Palensky, P., Dubisch, F., Brychta, M., Basciotti, D., Muller, W., 2013. Modelica-enabled rapid prototyping via TRNSYS. 13th International Conference of the International Building Performance Simulation Association, Chambery, France, 3179–87.

EnergyPlus | EnergyPlus. 2021. Accessed July 06, 2021. https://energyplus.net/

Figaj, R., M. Szubel, E. Przenzak, and M. Filipowicz. 2019. Feasibility of a small-scale hybrid dish/flat-plate solar collector system as a heat source for an absorption cooling unit. *Applied Thermal Engineering* 163 (December):114399. doi:10.1016/j.applthermaleng.2019.114399.

Franchini, G., E. Notarbartolo, L. E. Padovan, and A. Perdichizzi. 2015. Modeling, design and construction of a micro-scale absorption Chiller. *Energy Procedia* 82 (December):577–83. doi:10.1016/j.egypro.2015.11.874.

Grignaffini, S., and M. Romagna. 2012. Solar cooling design: A case study. Kos, Greece, September. 399–410. doi:10.2495/ARC120351.

Groppi, D., A. Pfeifer, D. A. Garcia, G. Krajačić, and N. Duić. 2021. A review on energy storage and demand side management solutions in smart energy Islands. *Renewable and Sustainable Energy Reviews* 135 (January):110183. doi:10.1016/j.rser.2020.110183.

Hang, Y., and M. Qu. 2010. Design and analysis of an integrated solar absorption cooling and heating system at Purdue University. ASME 2010 4th International Conference on Energy Sustainability, 2, Phoenix, Arizona, USA, January. 225–30. doi:10.1115/ES2010-90268.

Hirmiz, R., M. F. Lightstone, and J. S. Cotton. 2018. Performance enhancement of solar absorption cooling systems using thermal energy storage with phase change materials. *Applied Energy* 223 (August):11–29. doi:10.1016/j.apenergy.2018.04.029.

Khan, M. S. A., A. W. Badar, T. Talha, M. W. Khan, and F. S. Butt. 2018. Configuration based modeling and performance analysis of single effect solar absorption cooling system in TRNSYS. *Energy Conversion and Management* 157 (February):351–63. doi:10.1016/j.enconman.2017.12.024.

Magazzino, C., M. Mele, N. Schneider, and S. A. Sarkodie. 2021. Waste generation, wealth and GHG emissions from the waste sector: Is Denmark on the path towards circular economy? *Science of the Total Environment* 755 (February):142510. doi:10.1016/j.scitotenv.2020.142510.

Mohaghegh, M. R., M. Heidari, S. Tasnim, A. Dutta, and S. Mahmud. 2021 March. Latest advances on hybrid solar–biomass power plants. *Energy Sources, Part A: Recovery, Utilization, and Environmental Effects* 1–24. doi:10.1080/15567036.2021.1887974.

Mustafa, A. A., Z. Noranai, and A. A. Imran. 2021 May. SOLAR ABSORPTION COOLING SYSTEMS: A REVIEW. *Journal of Thermal Engineering* 970–81. doi:10.18186/thermal.931165.

Nienborg, B., A. Dalibard, L. Schnabel, and U. Eicker. 2017. Approaches for the optimized control of solar thermally driven cooling systems. *Applied Energy* 185 (January):732–44. doi:10.1016/j.apenergy.2016.10.106.

Nižetić, S., M. Jurčević, D. Čoko, M. Arıcı, and A. T. Hoang. 2021. Implementation of phase change materials for thermal regulation of photovoltaic thermal systems: Comprehensive analysis of design approaches. *Energy* 228 (August):120546. doi:10.1016/j.energy.2021.120546.

Palomba, V., E. Borri, A. Charalampidis, A. Frazzica, L. F. Cabeza, and S. Karellas. 2020. Implementation of a solar-biomass system for multi-family houses: Towards 100% renewable energy utilization. *Renewable Energy* 166 (April):190–209. doi:10.1016/j.renene.2020.11.126.

Sheikhani, H., R. Barzegarian, A. Heydari, A. Kianifar, A. Kasaeian, G. Gróf, O. Mahian, 2018. A review of solar absorption cooling systems combined with various auxiliary energy devices. *Journal of Thermal Analysis and Calorimetry* 134 (3):2197–212. December. doi:10.1007/s10973-018-7423-4.

Shirazi, A., S. Pintaldi, S. D. White, G. L. Morrison, G. Rosengarten, and R. A. Taylor. 2016. Solar-assisted absorption air-conditioning systems in buildings: Control strategies and operational modes. *Applied Thermal Engineering* 92 (January):246–60. doi:10.1016/j.applthermaleng.2015.09.081.

Simulink - Simulation and Model-Based Design. 2021. Accessed July 06, 2021. https://www.mathworks.com/products/simulink.html

Şoimoşan, T.-M., and R.-A. Felseghi. 2016. Efficient solar technique for buildings connected to the district heating system. Indicators of performance 16th International Multidisciplinary Scientific GeoConference SGEM 2016 November 2016 Vienna, Austria. 3 : 251–58.

Sokhansefat, T., D. Mohammadi, A. Kasaeian, and A. R. Mahmoudi. 2017. Simulation and parametric study of a 5-ton solar absorption cooling system in Tehran. *Energy Conversion and Management* 148 (September):339–51. doi:10.1016/j.enconman.2017.05.070.

Tsoutsos, T., E. Aloumpi, Z. Gkouskos, and M. Karagiorgas. 2010. Design of a solar absorption cooling system in a Greek hospital. *Energy and Buildings* 42 (2):265–72. February. doi:10.1016/j.enbuild.2009.09.002.

Uçkan, İ., and A. A. Yousif. 2021. Investigation of the effect of various solar collector types on a solar absorption cooling system. *Energy Sources, Part A: Recovery, Utilization, and Environmental Effects* 43 (7):875–92. April. doi:10.1080/15567036.2020.1766599.

Ürge-Vorsatz, D., L. F. Cabeza, S. Serrano, C. Barreneche, and K. Petrichenko. 2015. Heating and cooling energy trends and drivers in buildings. *Renewable and Sustainable Energy Reviews* 41 (January):85–98. doi:10.1016/j.rser.2014.08.039.

Welcome | TRNSYS: Transient System Simulation Tool. 2021. Accessed July. 06, 2021. http://www.trnsys.com/

Wetter, M., W. Zuo, T. S. Nouidui, and X. Pang. 2014. Modelica Buildings library. *Journal of Building Performance Simulation* 7 (4):253–70. July. doi:10.1080/19401493.2013.765506.

Xu, Z. Y., and R. Z. Wang. 2017. Comparison of CPC driven solar absorption cooling systems with single, double and variable effect absorption chillers. *Solar Energy* 158 (December):511–19. doi:10.1016/j.solener.2017.10.014.

Zisopoulos, G., A. Nesiadis, K. Atsonios, N. Nikolopoulos, D. Stitou, and A. Coca-Ortegón. 2021. Conceptual design and dynamic simulation of an integrated solar driven thermal system with thermochemical energy storage for heating and cooling. *Journal of Energy Storage* 41 (September):102870. doi:10.1016/j.est.2021.102870.